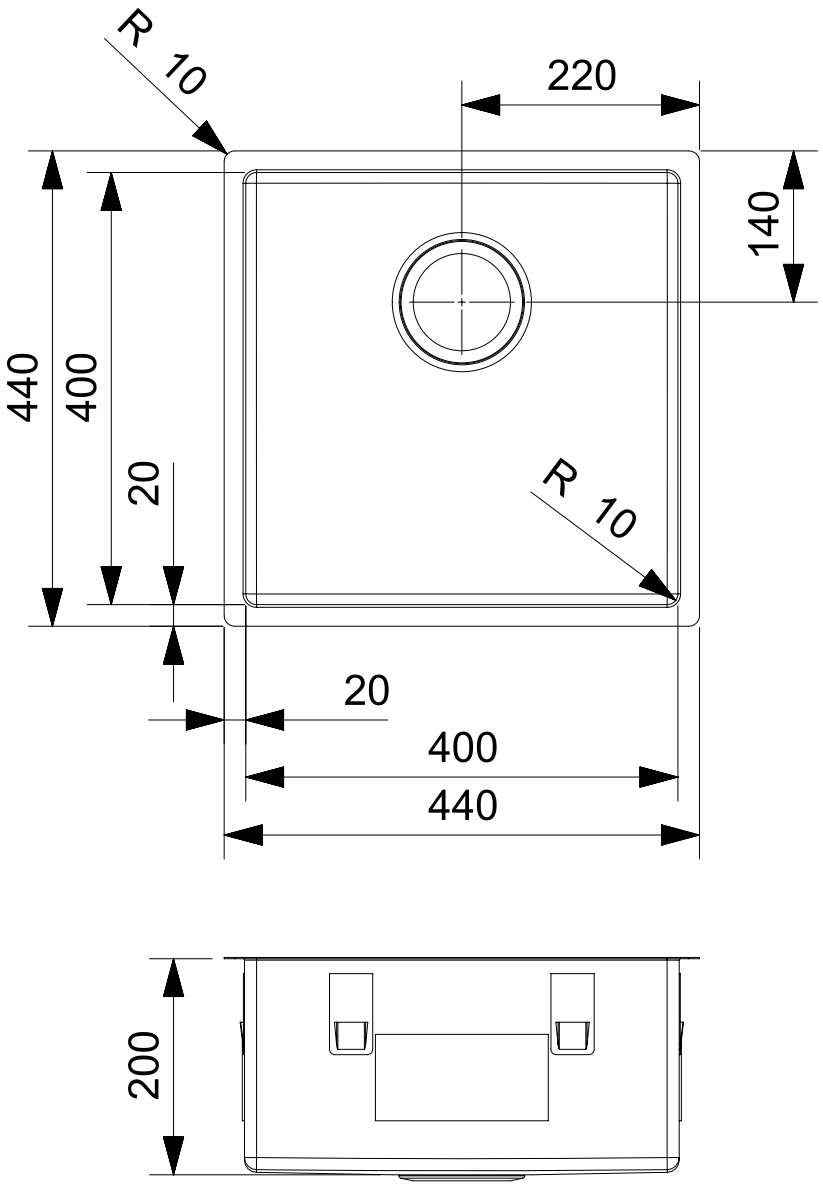

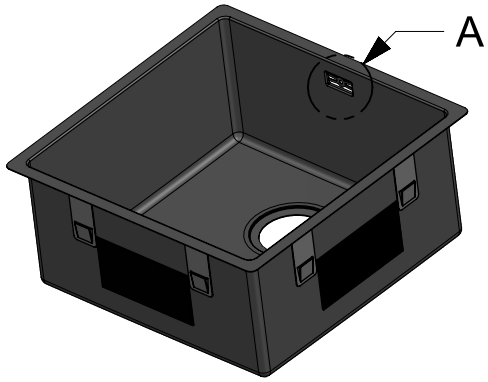

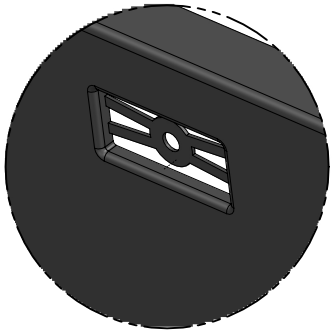

Detail A

Miami 40x40 Gun Metal

Date: 27-06-2022

Tolerantie buitenmaat per zijde: ±0.5mm
Toleranz Aussenmasse pro Seite: ±0.5mm
Per side the outside tolerance measure: ±0.5mm